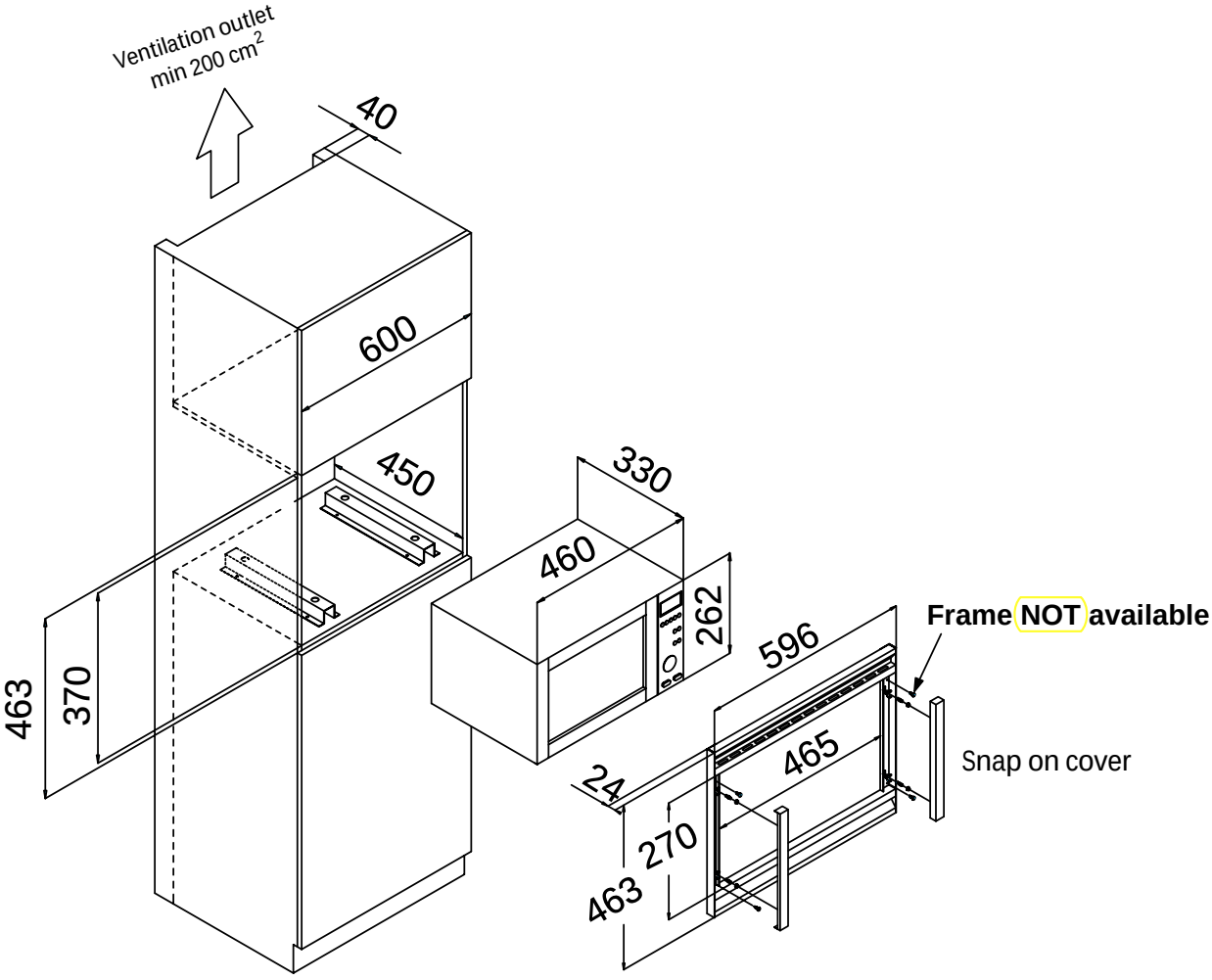
Ventilation outlet
min 200 cm2
40
600
450
463
370
330
460
262
596
465
24
270
463
Frame NOT available
Snap on cover