(UK) CHROME PLATED BOX FOR CORNER NOT
INCLUDED IN THE PACKAGE - AVAILABLE UPON REQUEST

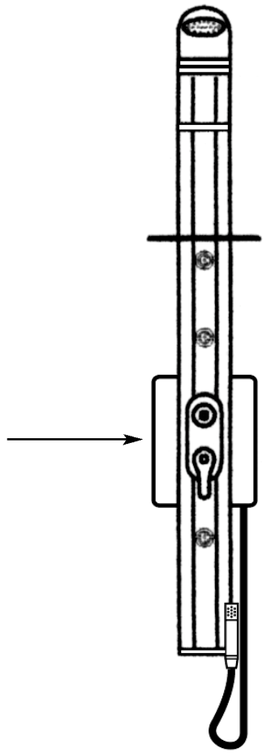

Patented
Made in Italy

(UK) HYDROMASSAGE ALUMINIUM
SHOWER PANEL

MOD. 4STRMONITECH

4sfera® di DROP

DROP

(UK) WALL

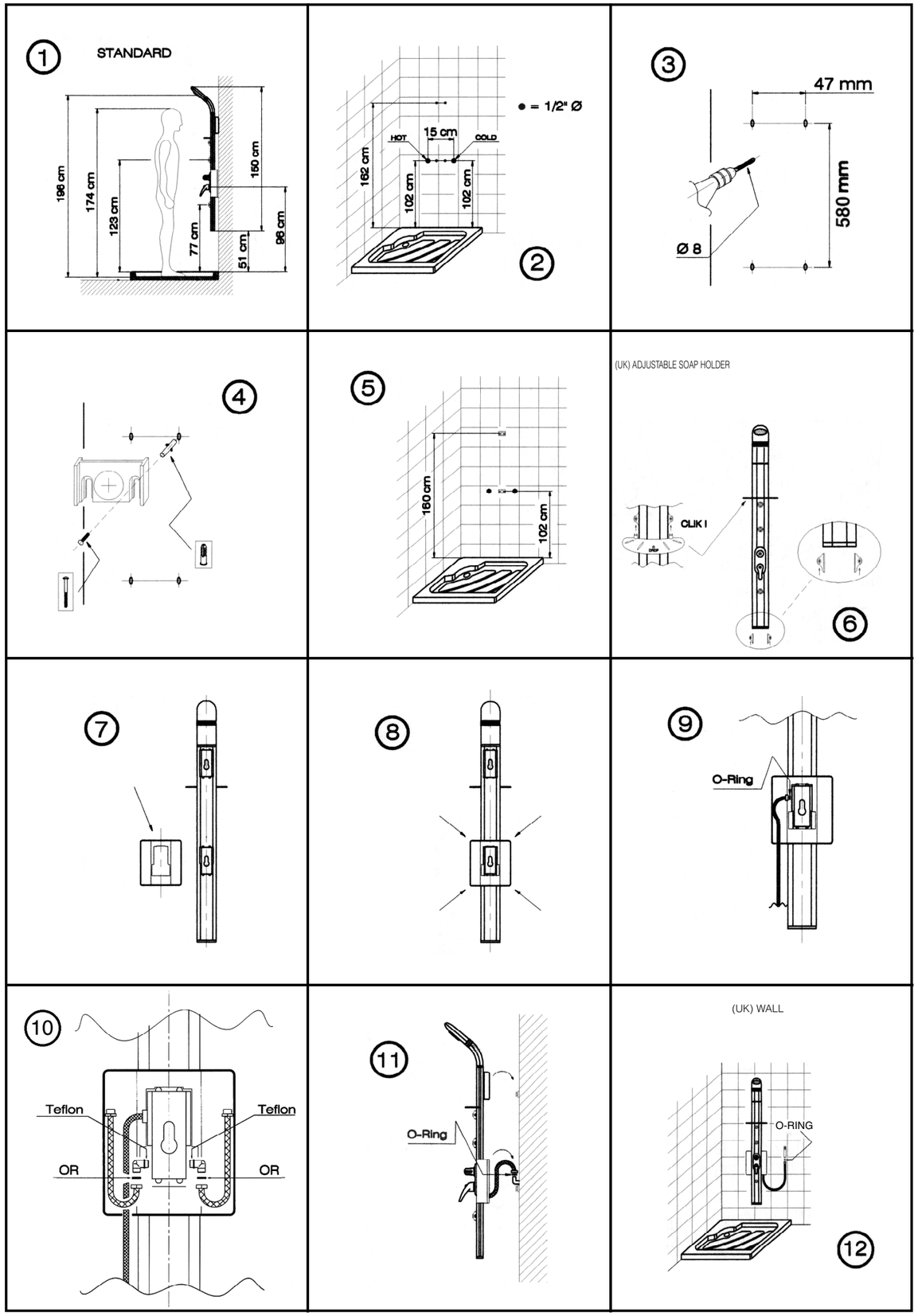
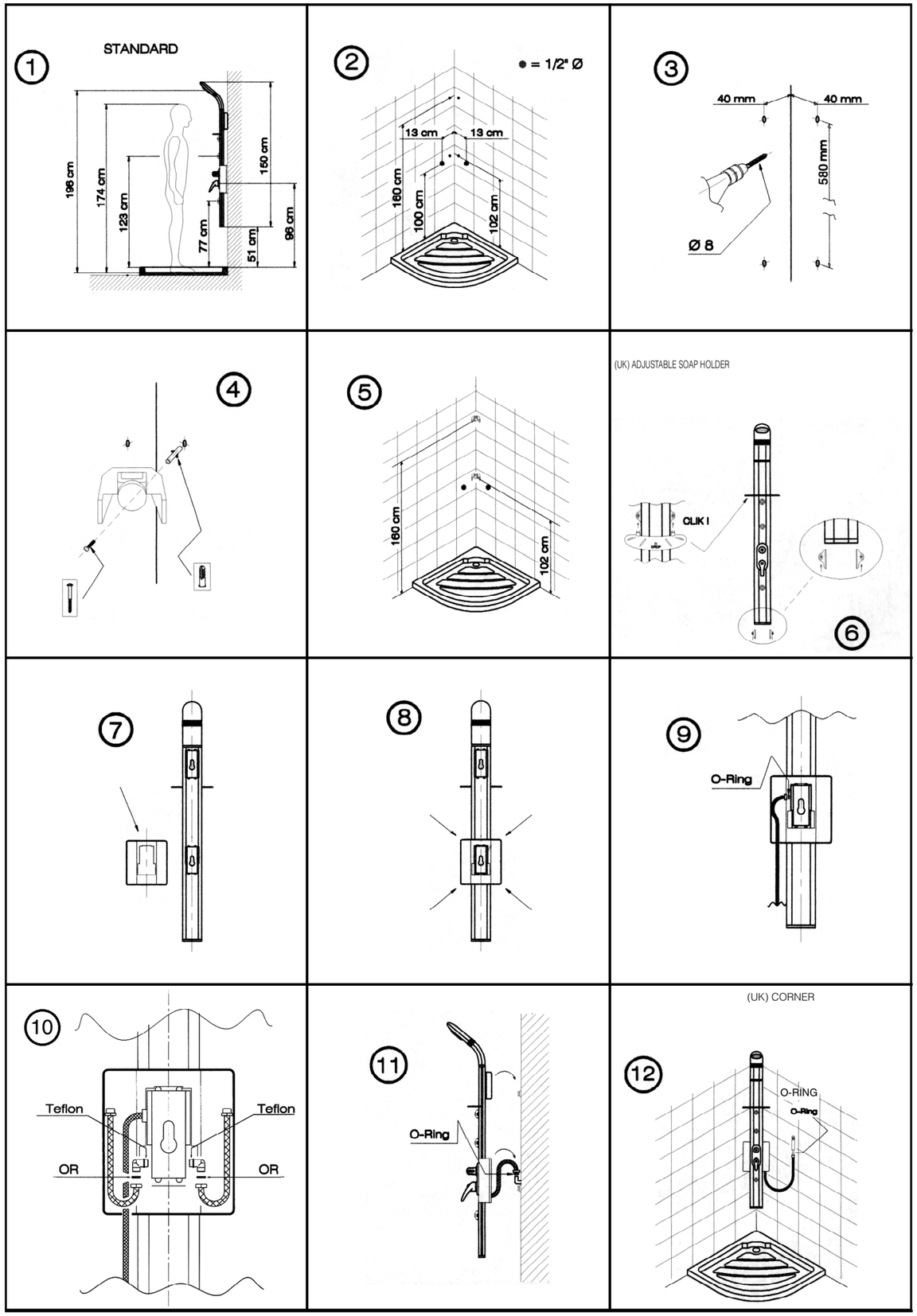
(UK) CORNER