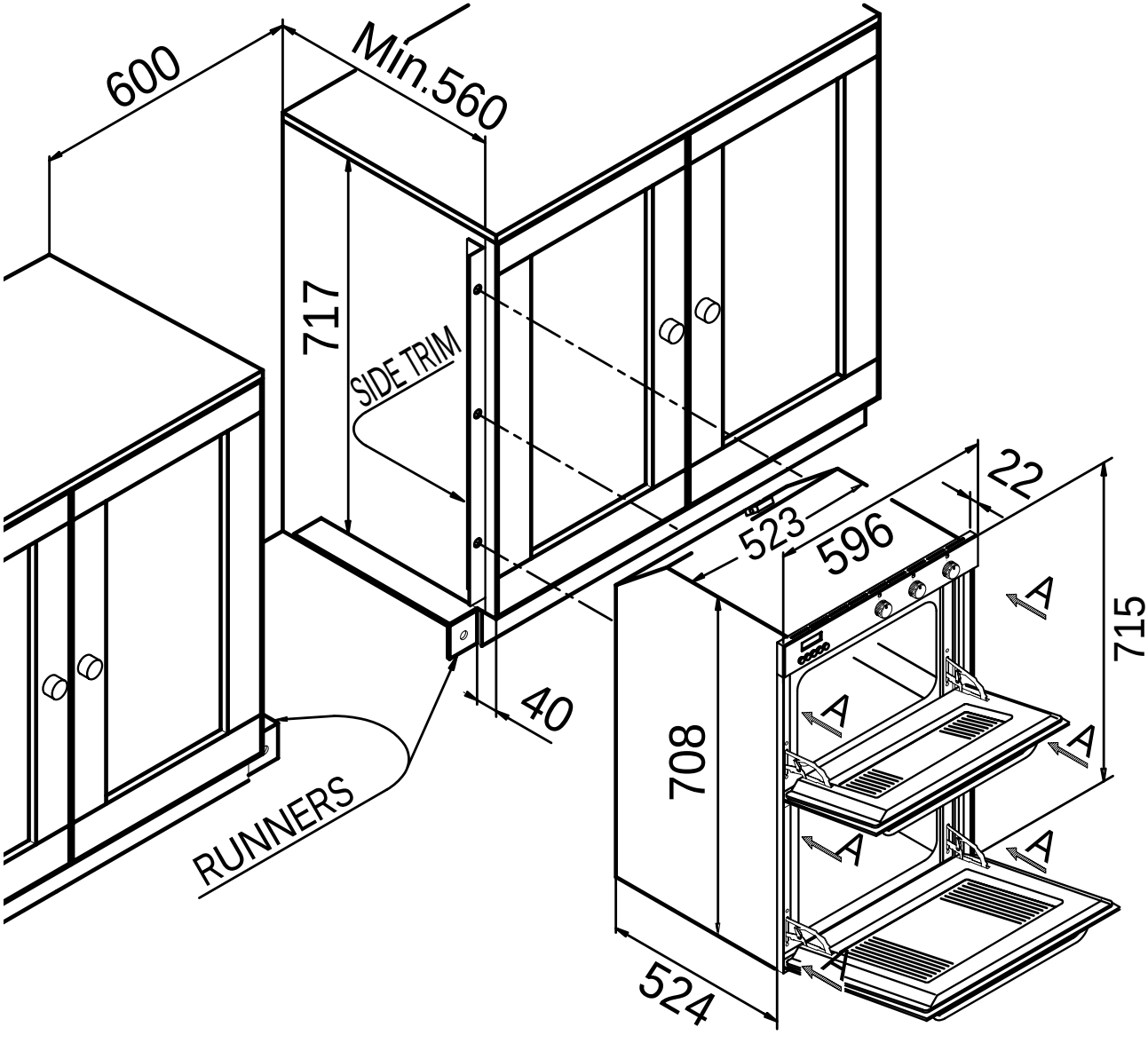
600
Min.560
717
SIDE TRIM
RUNNERS
40
523
596
22
715
708
524
A
A
A
A
A
A