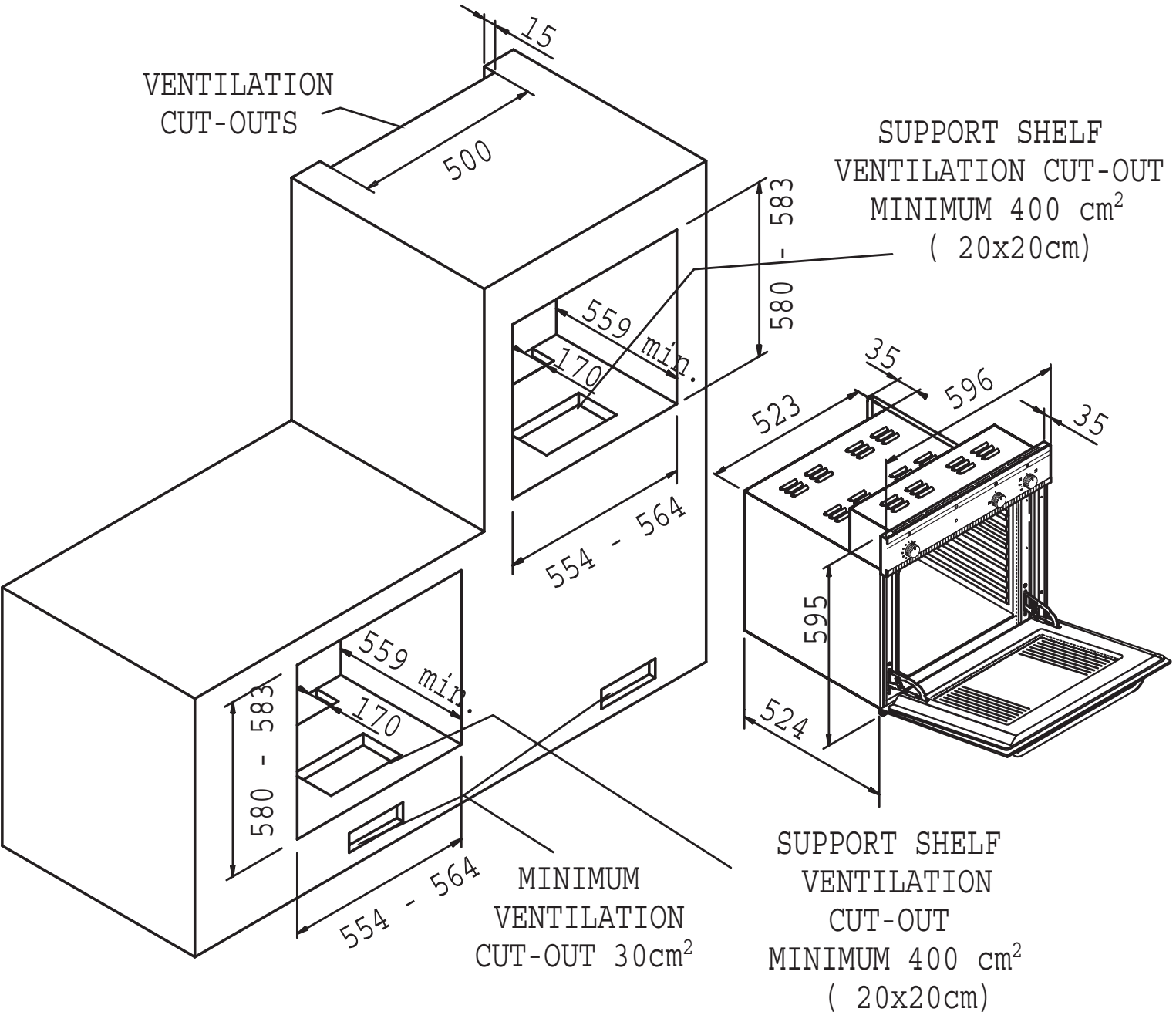
15
VENTILATION
CUT-OUTS
500
SUPPORT SHELF
VENTILATION CUT-OUT
MINIMUM 400 cm²
(20x20cm)
583
580 -
559 min.
170
554 - 564
35
596
523
35
595
524
559 min.
170
580 - 583
554 - 564
MINIMUM
VENTILATION
CUT-OUT 30cm²
SUPPORT SHELF
VENTILATION
CUT-OUT
MINIMUM 400 cm²
(20x20cm)