Project Ref:	Product Name:	Model Numbers:
DX001	Downflow Heater	FX20VE

Product Description

Installed fan heater with electronic runback timer designed for high level mounting. Provides rapid warm up for bathrooms, ensuites and kitchens.

Key Features

- 2kW maximum output
- 1kW output selectable on installation
- Pull cord operation
- Visual ON/OFF indicator
- Adjustable runback timer from 5 - 155 minutes
- Run-back timer is factory pre-set to 15minutes
- Identical footprint to FX20N/FX20E range
- IP24 rated

Technical Specification

Controls
On/off pull cord with visual indicator

1kW/2kW output selector (internal - set up at installation)

Electronic runback timer automatically switches heater off after pre set time. Adjustable (on installation) from 5 - 155 minutes

Element
2kW stitched type with thermal fuse protection

Thermostat
None

Installation
Two key slot fixings, plus third fixing hole. Identical footprint to FX20N/E, allowing no-hassle in-field replacement

Construction
Double insulated plastic case. Moulded in flame-retardant Nylon.

Thermal Cut Out
Manual reset cut out and thermal fuse link on element

Colour/Finish
White

Cable length
None fitted

IP Rating
IP24 (must be mounted above 1.8m)

Standard Warranty
12 months

Product Range Details

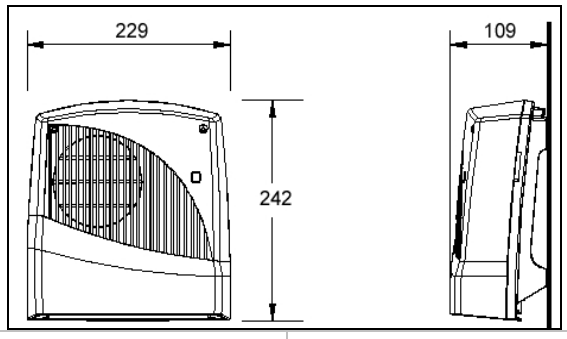

Performance	
Maximum Output	2kW
Selectable Outputs	1kW, 2kW (selectable on installation only)
Dimensions	
Height	242mm
Width	229mm
Depth	109mm
Weight	1.1kg
Packaging	
Item number	016270
Packed dimensions (h/w/d)	260 x 245 x 120 mm
Primary packing material	cardboard
Secondary packing material	1 polybag
Total packed weight	1.3kg

Additional Information

BEAB approval pending

Accessories

No accessories are available for this product.