elica

IT Istruzioni di montaggio e d'uso
EN Instruction on mounting and use
DE Montage- und Gebrauchsanweisung
FR Prescriptions de montage et mode d’emploi
ES Montaje y modo de empleo
NL Montagevoorschriften en gebruiksaanwijzingen
RU Инструкции по монтажу и эксплуатации
PL Instrukcja montażu i obsługi
EL ΟΔΗΓΙΕΣ ΣΥΝΑΡΜΟΛΟΓΗΣΗΣ ΚΑΙ ΧΡΗΣΗΣ
PT Instruções para montagem e utilização
DA Bruger- og monteringsvejledning

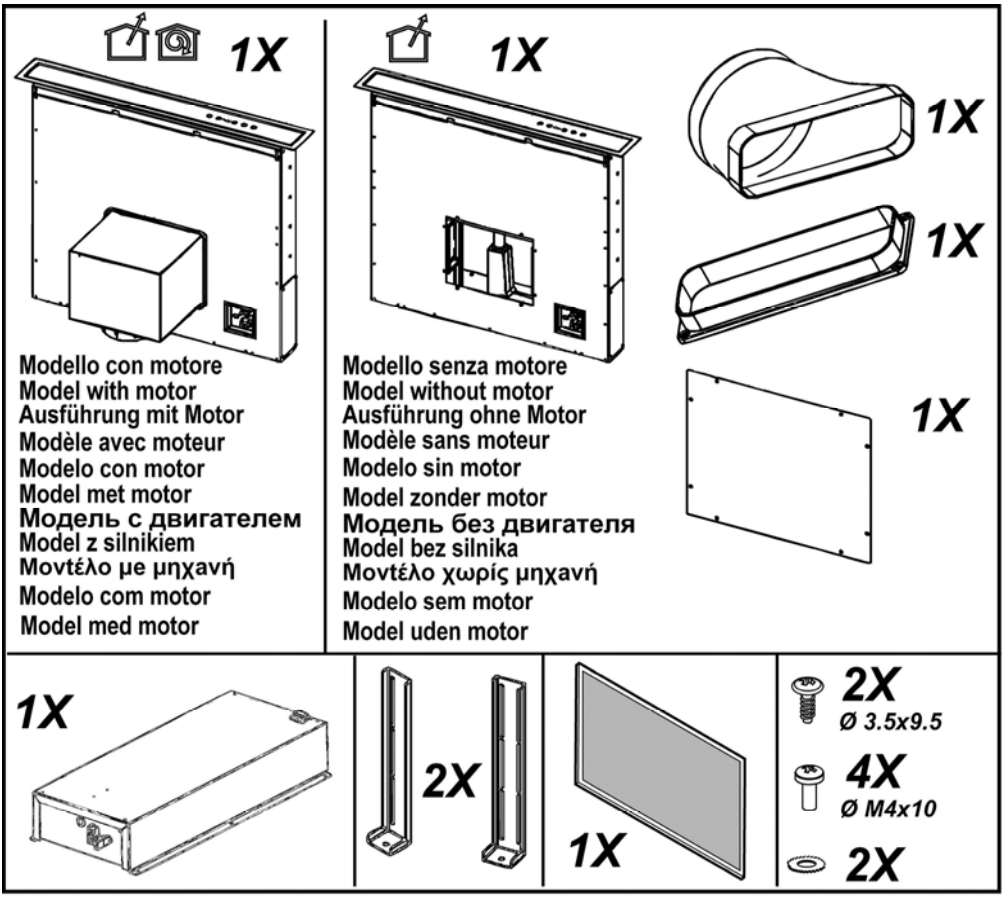
1X
Modello con motore
Model with motor
Ausführung mit Motor
Modèle avec moteur
Modelo con motor
Model met motor
Модель с двигателем
Model z silnikiem
Μοντέλο με μηχανή
Modelo com motor
Model med motor
1X
Modello senza motore
Model without motor
Ausführung ohne Motor
Modèle sans moteur
Modelo sin motor
Model zonder motor
Модель без двигателя
Model bez silnika
Μοντέλο χωρίς μηχανή
Modelo sem motor
Model uden motor
1X
1X
1X
1X
2X
1X
2X
Ø 3.5x9.5
4X
Ø M4x10
2X

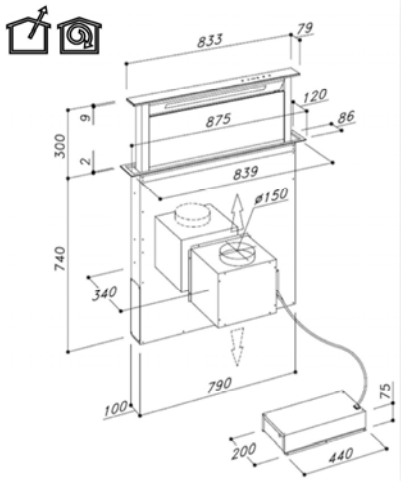
833
79
120
875
86
9
300
2
839
ø150
740
340
790
100
75
200
440

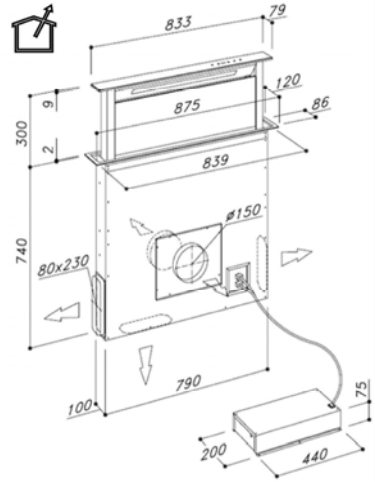
833
79
120
875
86
9
300
2
839
ø150
740
80x230
790
100
75
200
440

1

2

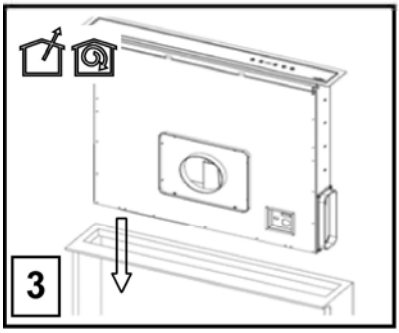
3

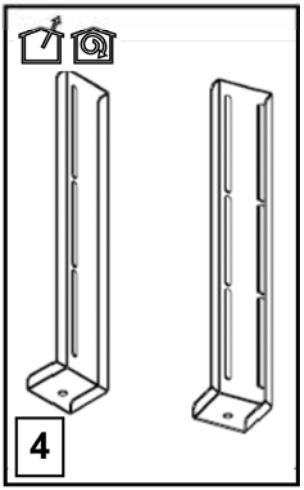
4

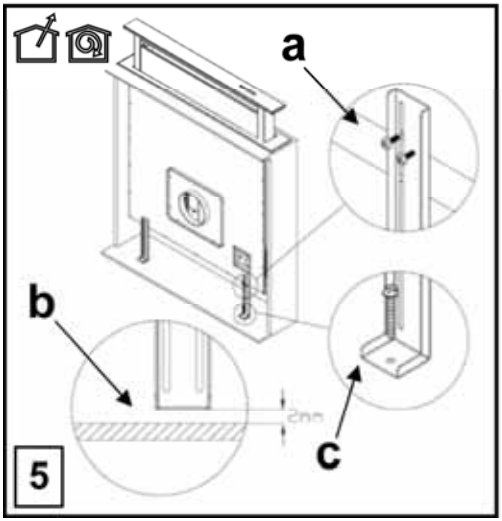
a
b
c
2mm
5

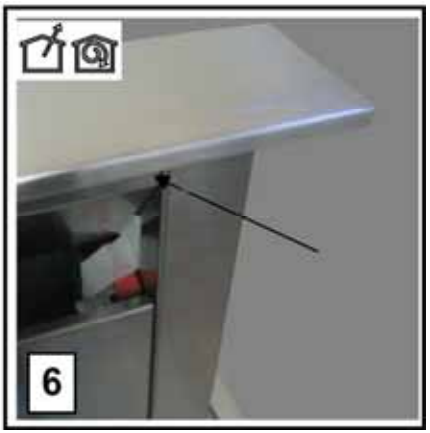
6

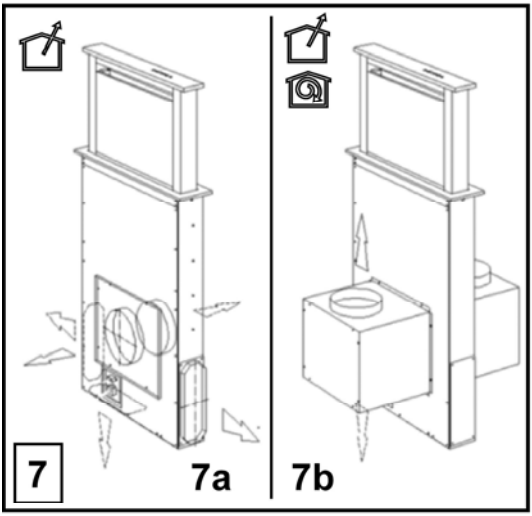
7
7a
7b

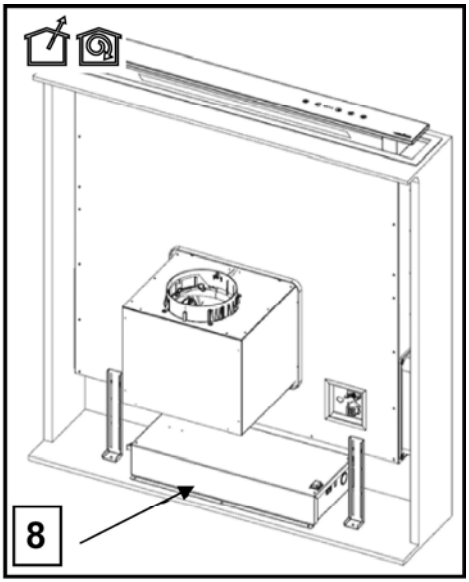
8

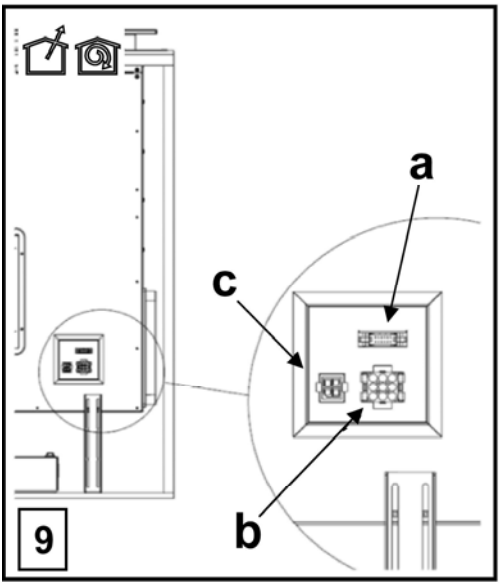
a
c
b
9

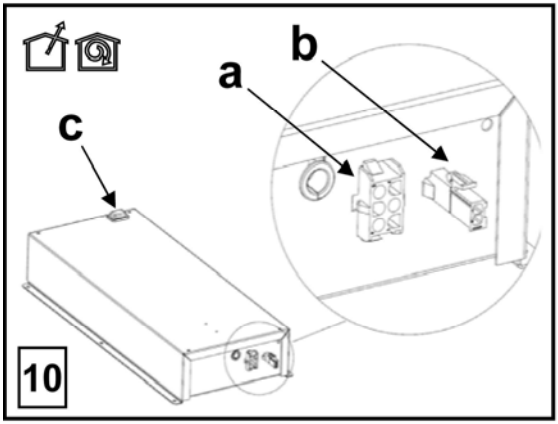
a
b
c
10

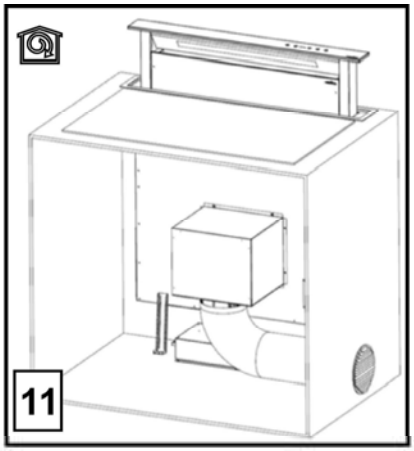
11

12

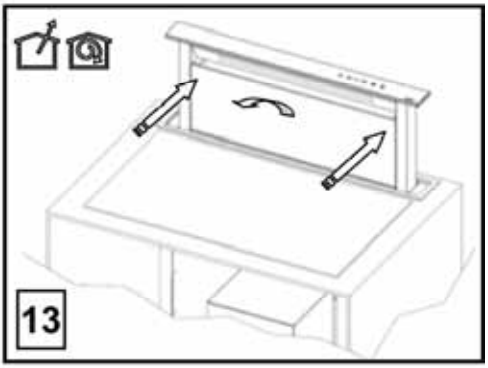
13

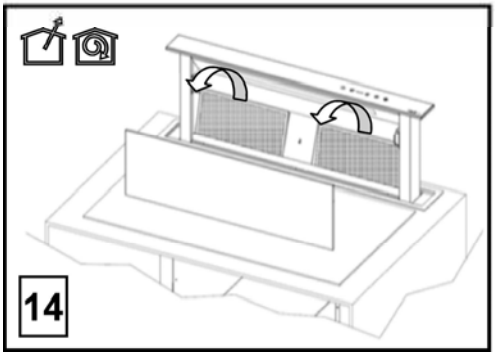
14

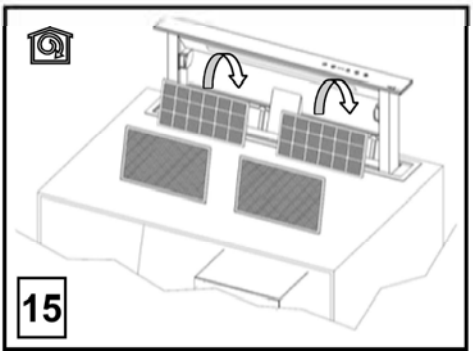
15

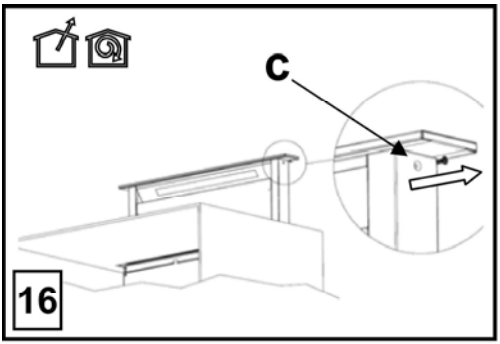
C
16

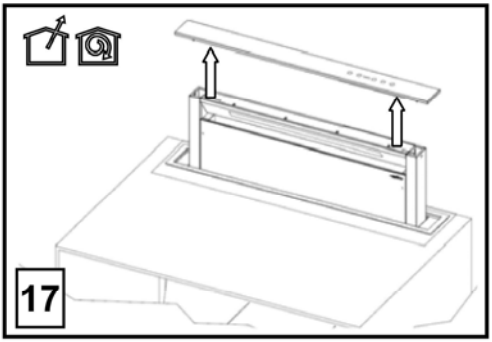
17

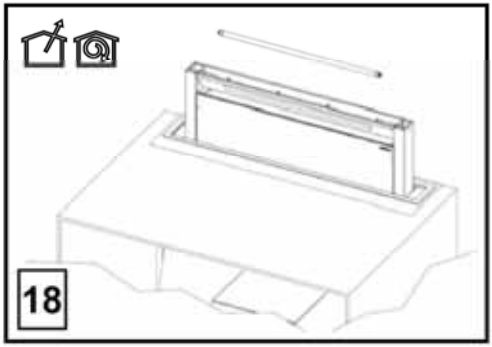
18

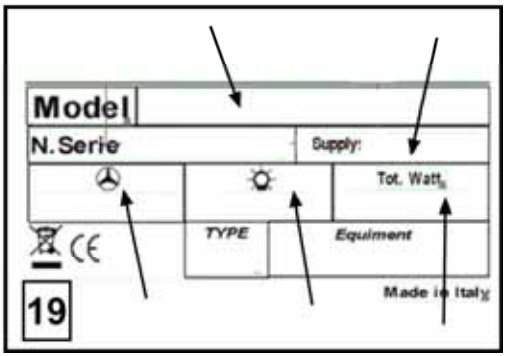
Model
N. Serie
Supply:
Tot. Watt
TYPE
Equipment
Made in Italy
19

EN - Instruction on mounting and use

Closely follow the instructions set out in this manual. All responsibility, for any eventual inconveniences, damages or fires caused by not complying with the instructions in this manual, is declined.

The hood can look different to that illustrated in the drawings in this booklet. The instructions for use, maintenance and installation, however, remain the same.

! It is important to conserve this booklet for consultation at any moment. In the case of sale, cession or move, make sure it is together with the product.

! Read the instructions carefully: there is important information about installation, use and safety.

! Do not carry out electrical or mechanical variations on the product or on the discharge conduits.

Note: the elements marked with the symbol "(*)" are optional accessories supplied only with some models or elements to purchase, not supplied.

⚠ Caution

WARNING! Do not connect the appliance to the mains until the installation is fully complete.

Before any cleaning or maintenance operation, disconnect hood from the mains by removing the plug or disconnecting the mains electrical supply.

Always wear work gloves for all installation and maintenance operations.

The appliance is not intended for use by children or persons with impaired physical, sensorial or mental faculties, or if lacking in experience or knowledge, unless they are under supervision or have been trained in the use of the appliance by a person responsible for their safety.

This appliance is designed to be operated by adults, children should be monitored to ensure that they do not play with the appliance.

This appliance is designed to be operated by adults. Children should not be allowed to tamper with the controls or play with the appliance.

Never use the hood without effectively mounted grating!

The hood must NEVER be used as a support surface unless specifically indicated.

The premises where the appliance is installed must be sufficiently ventilated, when the kitchen hood is used together with other gas combustion devices or other fuels.

The ducting system for this appliance must not be connected to any existing ventilation system which is being used for any other purpose such as discharging exhaust fumes from appliances burning gas or other fuels.

The flaming of foods beneath the hood itself is severely prohibited.

The use of exposed flames is detrimental to the filters and may cause a fire risk, and must therefore be avoided in all circumstances.

Any frying must be done with care in order to make sure that the oil does not overheat and ignite.

Accessible parts may become hot when used with cooking appliances.

With regards to the technical and safety measures to be adopted for fume discharging it is important to closely follow the regulations provided by the authorised authorities.

The hood must be regularly cleaned on both the inside and outside (AT LEAST ONCE A MONTH).

This must be completed in accordance with the maintenance instructions provided in this manual). Failure to follow the instructions provided in this user guide regarding the cleaning of the hood and filters will lead to the risk of fires.

Do not use or leave the hood without the lamp correctly mounted due to the possible risk of electric shocks.

We will not accept any responsibility for any faults, damage or fires caused to the appliance as a result of the non-observance of the instructions included in this manual.

When handling the hood do not put hands within the range of action of the pull-out suction panel (trolley)

The hood is equipped with safety switches which inhibit operation when the front filter panel is unhooked.

With the intention of constantly improving our products, we reserve the right to make all the changes in their technical, functional or design characteristics, deriving from their evolution. In case of the version with external motor, the normal operation of the hood requires the use of a suction unit (external motor) of the same manufacturer.

This appliance is marked according to the European directive 2002/96/EC on Waste Electrical and Electronic Equipment (WEEE). By ensuring this product is disposed of correctly, you will help prevent potential negative consequences for the environment and human health, which could otherwise be caused by inappropriate waste handling of this product.

The symbol on the product, or on the documents accompanying the product, indicates that this appliance may not be treated as household waste. Instead it should be taken to the appropriate collection point for the recycling of electrical and electronic equipment. Disposal must be carried out in accordance with local environmental regulations for waste disposal.

Use

The hood is designed to be used either for exhausting or filter version.

Ducting version

In this case the fumes are conveyed outside by means of a special pipe connected with the connection ring located on top of the hood.

Attention! The exhausting pipe is not supplied and must be purchased apart.

Diameter of the exhausting pipe must be equal to that of the connection ring = 150mm.

In the horizontal runs the exhausting pipe must be slightly slanted (about 10°) and directed upwards to vent the air easily from the room to the outside.

Attention! If the hood is supplied with active charcoal filter, then it must be removed.

Filter version

One active charcoal filter is needed for this and can be obtained from your usual retailer.

The filter removes the grease and smells from the extracted air before sending it back into the room through the upper outlet grid.

Note: The recycled air in the charcoal filter is sent back to the kitchen through a duct which conveys air on a side of the cabinet (**Fig. 11**).

Non-return valve locking

Attention, before connecting the flexible air outlet pipe make sure that the non-return valves of the suction unit can freely rotate (**Fig. 12**).

The models with no suction motor only operate in ducting mode, and must be connected to an external suction device (not supplied).

The connecting instructions are supplied with the peripheral suction unit.

Installation

When installing the product, it is recommended to keep a minimum distance of 400mm between the worktop and any components laid on top of the hood.

This is to let the suction panel move upwards (opening) and downwards (closing) without any obstacles, and to facilitate access to the hood controls on the panel.

WARNING: Put the metal box containing the electronic components at a distance not shorter than 65 cm from the gas hob or 65 cm from the hood suction point.

RECOMMENDATION: We recommend you to install the metal box containing the electronic components at a distance of at least 10 cm from the ground and sufficiently from all the sources of heat (e.g.: side of an oven or hob).

If the instructions for installation for the gas hob specify a greater distance, this must be adhered to.

Electrical connection

The hood must be connected to the mains supply by qualified and trained technicians.

The mains power supply must correspond to the rating indicated on the plate situated inside the hood. If provided with a plug connect the hood to a socket in compliance with current regulations and positioned in an accessible area. If it not fitted with a plug (direct mains connection) or if the plug is not located in an accessible area apply a double pole switch in accordance with standards which assures the complete disconnection of the mains under conditions relating to over-current category III, in accordance with installation instructions.

Warning! Before re-connecting the hood circuit to the mains supply and checking the efficient function, always check that the mains cable is correctly assembled.

Warning! Power cable replacement must be undertaken by the authorised service assistance centre or similar qualified person.

Mounting

Before starting to mount the appliance, make sure that no component is damaged, otherwise contact the dealer and stop mounting. In addition, read all the instructions below carefully.

- Use an air outlet pipe no longer than 5 metres.
- Limit the number of curves in the duct since each curve reduces the suction effectiveness equivalent to 1 linear metre. (E.g.: if two 90° curves are used, the duct should be no longer than 3 metres).
- Avoid drastic changes of direction.
- Use a duct with 150mm diameter constant for the whole length.
- Use a duct made of standard complying material.
- Remove the safety shim highlighted in the picture (**Fig. 1-2**) at the end of the installation.
- In case of failure to observe the instructions above, the supplier can not be held responsible for capacity or noise problems and no warranty will be granted.
- Before making the hole, make sure that the inside of the cabinet, near the hood housing area, does not have the structure of the cabinet or other particulars which may cause problems for the proper installation. Make sure that the overall dimensions of the hood and the hob ae compatible with the cabinet and therefore the installation is feasible.
- Make a 848x100mm rectangular hole on the back of the hob.
- In case of version with motor already mounted, remove the screws and the suction unit to insert the hood into the hole made.
- Install the hood in the hole made, inserting it from above, as shown (**Fig. 3**). In case of version with motor on board, it is necessary to remove the suction unit before inserting the product into the cabinet.
- Fix the hood inside the cainet using the special brackets supplied (**Fig. 4**). Start mounting the brackets in the lower part of the hood (**Fig. 5a**) making sure that there is a distance of 2 mm between the lower part of the bracket and the cabinet bottom (**Fig. 5b**). This distance allows the traction of the product downwards on fixing, (**Fig. 5c**), so that the stainless steel frame adheres perfectly on the worktop.
- Before inserting the screws into the cabinet, make sure that the product is perfectly perpendicular to the worktop.
- After completing the installation and connecting the product to the power supply, lift the hood and remove the door lock (**Fig. 6**).
- In case of version with motor on board start mounting the motor unit directing the air outlet to the chosen position downwards or upwards (**Fig. 7b**). The motor can be installed on both the front side and the back one of the hood. Once the installationof the motor has been comleted, start mounting the duct for the air outlet.
- In case of version with external motor put the suction unit (external motor) in a suitable area and arrange the air outlet duct. Start mounting the air outlet duct between the external motor and the hood. Select the air outlet among the five possibilities (**Fig. 7a**) and install the union supplied.
- Put the metal box containing the electronic components in an easily accessible area for any assistance operations (**Fig. 8**), connecting the electric connectors of the same to the hood: pushbutton panel connector (**Fig. 9a**), 9-pole connector (**Fig. 9b**), neon connector (**Fig. 9c**)
- In applications with external motor, connect the cable of the motor unit to the special connector on the electronic component box (**Fig. 10a**) in case an external control unit ***SEM7*** is used connect the 2-pole connector as well (**Fig. 10b**)
- Connect the product to the power supply

Operation

Use the high suction speed in cases of concentrated kitchen vapours. It is recommended that the cooker hood suction is switched on for 5 minutes prior to cooking and to leave in operation during cooking and for another 15 minutes approximately after terminating cooking.
The hood is equipped with a **"TOUCH"** device to control the lights and speed.
For the correct use please carefully read the intructions below.
The cooker hood can be controlled through a remote control available as accessory kit (see the paragraph relating to the functioning of the remote control).

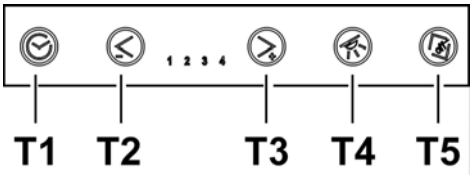

- **Key T1**: delays hood switching off timing the speed set for some minutes.
  By such function, when the timing is elapsed, the hood switches off.
  The timing is divided as follows:
  - suction speed (power) 1: **20 minutes**
  - suction speed (power) 2: **15 minutes**
  - suction speed (power) 3: **10 minutes**
  - suction speed (power) 4: **5 minutes**

  When keys **T2** and **T3** are pressed, the hood leaves the timed function and the suction speed (power) increases or decreases according to the key pressed. During the timing phase the LED related to the corresponding speed flashes.
- **Key T2:** Decreases the active suction speed (power) (**4→3→2→1→OFF**).
  The speed is displayed through the LED related to the corresponding speed.
  Key **T2** has no effect on the opening/closure of the suction panel.
- **Key T3:** Increases the active suction speed (power) (**1→2→3→4**).
  The speed is displayed through the LED related to the corresponding speed.
  Note: If the panel is closed (hood is off) key **T3** activates the opening of the suction panel first and then sets the hood to the suction speed (power) **1**.
- **Key T4**: Switches on the light
  Note: If the suction panel is closed (hood is off) key **T4** activates the opening of the suction panel first and then switches on the light.
- **Key T5:** Opens (Lifts) and closes (lowers) the suction panel.
  With the hood switched off and the panel closed, key **T5** opens the suction panel first and then sets the hood to the suction speed (power) **1**.
  With the hood switched on (at any speed) and the panel open, key **T5** switches off the hood first (and, if they are on, it switches off the lights as well) and then closes the suction panel.

Additional operating information

During the removal of the front panel due to cleaning and maintenance operations, all the electronic functions of suction and movement are locked.
Anti-pinch safety: if an obstacle obstructs the closure of the Downdraft, the closure is stopped and the trolley goes up.

Grease Filter saturation signal.

Every 40 hours of use the hood signals the need for maintenance of the grease filter.
The signal is by making all the suction speed LEDs (powers) flash contemporaneously.
Reset of the grease filter signal
After carrying out the maintenance of the grease filter, press key T1 for more than 3" in order to reset the signal.
Note: The signal is not displayed with hood switched off (OFF), regardless of the position of the suction panel.

Use of the remote control

the remote control can control all the functions of the hood:

Selection of the suction speeds (powers)

Control of the light

Key without functions

Reset and configuration of the filter saturation signal

Selection of the suction speeds (powers):
Press key "◄" or "► " until the following symbol is displayed on the remote control: "
Press key "+" or "-" or "■" respectively to increase or reduce or switch off the suction speed (power).
When the hood is off and the suction panel closed, by pressing key "■" or "+", the hood activates the opening of the suction panel first and then sets the hood to the suction speed (power) 1.
When the hood is on and the suction panel open press key "■" once to switch off the hood, press again to close the suction panel (if it is on, the light is switched off as well).

Light control:
Press key "◄" or "► " until the remote control displays the symbol
The central light can be switched on and off in two ways:
1. Press key "+" or "-" respectively to switch on (ON) or off (OFF) the central light.
2. Press key "■" to change the light state from off (OFF) to on (ON) or viceversa.

Note 1: if the suction panel is closed, the key switching on the light opens the panel first.
Note 2: With the light switched on, press key "■" once to switch off the hood, if no suction speed (power) is selected, the suction panel is closed by pressing again.

Reset and configuration of the filter saturation signal
Switch on the hood at any speed (see paragraph above "Selection of the suction speeds (powers)")
Press key "◄" or "► " until the remote control displays the symbol

Press keys "+" and "-" contemporaneously for more than 3 seconds, all the suction speed LEDs (powers) stop flashing, showing that the reset of the signal has been carried out.

Maintenance of the remote control

Cleaning the remote control:
Clean the remote control with a damp cloth and a neutral solution of detergent without abrasive substances.

Changing the battery:
- Open the battery casing using a small screwdriver with a flat point.
- Change the finished battery with a new one of 12 V type MN21/23
  In inserting the new battery respect the polarity indicated on the battery casing!
- Close the battery casing up again.

Disposal of the batteries
Ultimate disposal of the batteries should be handled according to all national laws and regulations. Do not place used batteries in your regular waste.
Ultimate disposal of the batteries must be done safely.
Contact your local waste management officials for other information regarding the environmentally sound collection, recycling, and disposal of the batteries.

Operation anomalies

The hood does not work
Make sure that:
- There is no current blackout
- A speed has been effectively selected.
- The panel is correctly hooked.
- The 9-pole connection is well inserted (**Picture 9b**).
- The red reset key above the electric system box is pressed.
- The wires in the 9-pole connection are well inserted into the connector. (During connection, exerting an overpressure may cause the contacts to bend).

The hood has low efficiency
Make sure that:
- The motor speed selected is sufficient for the quantity of fumes present
- The kitchen is aired enough to allow an air intake and the charcoal filter is not worn out (filter version hood).
- The air outlet pipe is not clogged.
- The suction unit non-return valves can rotate freely.

The hood stops during operation
Make sure that:
- There is no current blackout
- The differential magnetothermal switch (automatic circuit breaker) has not been released.

Maintenance

Attention! Before any cleaning or maintenance operation, disconnect the hood from the power supply removing the plug or switching off the master switch of the house or pressing the red button in the control box (Fig. 13c).
At the end of the clearing or maintenance operations on the hood or the filters, put the front panel and the filters back to their place following the instructions, checking the correct installation and hooking, otherwise the hood will not switch on.

Cleaning

The cooker hood should be cleaned regularly (at least with the same frequency with which you carry out maintenance of the fat filters) internally and externally. Clean using the cloth dampened with neutral liquid detergent. Do not use abrasive products. **DO NOT USE ALCOHOL!**
WARNING: Failure to carry out the basic cleaning recommendations of the cooker hood and replacement of the filters may cause fire risks.
Therefore, we recommend oserving these instructions.
The manufacturer declines all responsibility for any damage to the motor or any fire damage linked to inappropriate maintenance or failure to observe the above safety recommendations.

Grease filter

Traps cooking grease particles.
This must be cleaned once a month (or when the filter saturation indication system – if envisaged on the model in possession – indicates this necessity) using non aggressive detergents, either by hand or in the dishwasher, which must be set to a low temperature and a short cycle.
When washed in a dishwasher, the grease filter may discolour slightly, but this does not affect its filtering capacity.
Mounting and dismounting of the grease filters and charcoal filters must be carried out with the pul-out drawer of the hood in open position. For this, press key ON/1. Then remove the front panel pushing at the same time on the upper part of each side (**Fig. 13**). The panel rotates forward, letting the grease filters enter (**Fig. 14**).

Charcoal filter (filter version only)

It absorbs unpleasant odours caused by cooking.
The saturation of the activated charcoal occurs after more or less prolonged use, depending on the type of cooking and the regularity of cleaning of the grease filter.
In any case it is necessary to replace the cartridge at least every four mounths.
The carbon filter may NOT be washed or regenerated.
After removing the grease filter, it is possible to insert the charcoal filters (**Fig. 15**) (*not supplied*).

Replacing lamps

Disconnect the hood from the electricity.
Warning! Prior to touching the light bulbs ensure they are cooled down.

To replace the neon proceed as follows:

1. Lift the trolley.
2. Disconnect from power supply. (this operation can be carried out by disconnecting the plug, if accessible, or open the switch if envisaged during installation or press the red button in the control box (**Fig. 10c**)
3. Remove the screws which fix the upper front as shown in (**Fig. 16**)
4. Lift the upper front (**Fig. 17**)
5. Remove the damaged neon (**Fig. 18**) and replace it with one having the same characteristics (Mod.T5 14W 860).

If the lights do not work, make sure that the lamps are fitted properly into their housings before you call for technical assistance.