JCEM110011WH

EscapeLUX Emergency Range

EscapeLUX™ Emergency Twin Spot 3W 450lm 6000k IP65 White Self Test

Features & Benefits

- Manual or self-test selectable on standard versions
- DALI version available
- IP65 dustproof and water-resistant
- Non-maintained
- Black or white finish
- Lithium LiFePO4 battery with 5 year warranty

120° Beam | Class 2 | 6500K Colour temp. | 80 CRI: Ra | Emergency options | WH White | IK 06 Rating | IP 65 Rating | 5yr Warranty*

General Information

Mounting	**Wall/Surface**
Trade Name	**Twin spot**
Suitable For Zones	**Zone 1**
Product Group	**Emergency**
Color Finish	**White**
Product Range	**EscapeLUX**
IK Rating	**IK06**
Overall Dimensions	**277 x 56 x 291 mm**
Length (mm)	**277**
Width (mm)	**56**
Height (mm)	**291**
Product Weight(kg)	**1.11**
Light Source	**LED**
Recommended product location	**Emergency Route/Exit Luminaire, Internal or external Use,**
Method of fix	**Screw Fix to Suitable Surface**
IP Rating	**IP65**
Origin of manufacturer	**China**

Warranty	**5 Year Warranty (including 5 years on batteries)(See Website for terms and conditions)**
Operation Type	**Non-maintained only**
Driver manufacturer	**Seatronic**
LED manufacturer/type	**2835**
Customs Tariff code**	**9405692090**

Electrical

Voltage Rating	**220-240**
Inrush current(Amps)	**6.62A 15uS**
Operating Frequency Hz	**50/60**
Secondary running current(mA)	**540**
Constant Current or Constant Voltage	**Constant current**
Luminaire Circuit Wattage1	**4.5W(AC)**
Luminaire Circuit Wattage2	**3W(DC)**
Class	**II**
Output Voltage Max/Range (VDC)	**5.3**
EMC Compliant (EN55015)	**Yes**
Input Electrical Connections	**Live, neutral**
Pri - Cable rating (mm SQ / C.S.A.) & type	**2.5mm2 max**

Emergency Data

LOR % in Emergency Mode	**100**
Minimum Battery run time	**3 hours**
Recharge Time	**24 Hours**
Inverter PFC	**0.371**

Battery Data

Battery Specification	**9.6V 1500mAh LiFePO4**
Battery Type	**LiFePO4**
Nominal battery current	**1500mAH**
Recharge Time	**24 Hours**
Deep Discharge Protection	**Yes**
Battery Total Weight(kg)	**0.35**

Thermals

Operating Temperature Range °C	**0 to 45**

Performance Data

LED Life (Hours)*	**60000**
Actual Lumen Output1	**450**
Lumens Per Circuit Watt1	**150**
Color Rendering Index	**80-89**
CRI: Ra	**80**

Correlated Colour Temperature1	**6500**
Beam Angle °	**120**
Photometry Available	**Yes**

Construction

Primary Material	**Polycarbonate**
Lens	**Polycarbonate**

Packaging

Product carton overall dimensions(cm)	**27.9 x 6.4 x 30cm**
Product Packaged Weight(kg)	**1.11**
Quantity Per Outer Carton	**10**
Outer carton(L)- cm	**57.5**
Outer carton(W)- cm	**34.5**
Outer carton(H)- cm	**31.5**
Outer carton Net weight- kg	**11.10kg**
Outer carton Gross weight- kg	**11.70kg**
Product Bar Code EAN-13 Number	**5052544136351**
Outer carton Bar Code ITF-14 Number	**15052544136358**

Standards & Approvals

Manufactured in accordance to	**BS EN60598-2-22**
CE Marked	**yes**
UKCA Marked	**Yes**
Date code/Purchase order No.	**Yes**
WEEE symbol	**yes**
Certificate Of Conformity	**Available on request**
Accredited Members	**LIA, ISO9001-2015, ISO14001-2015**

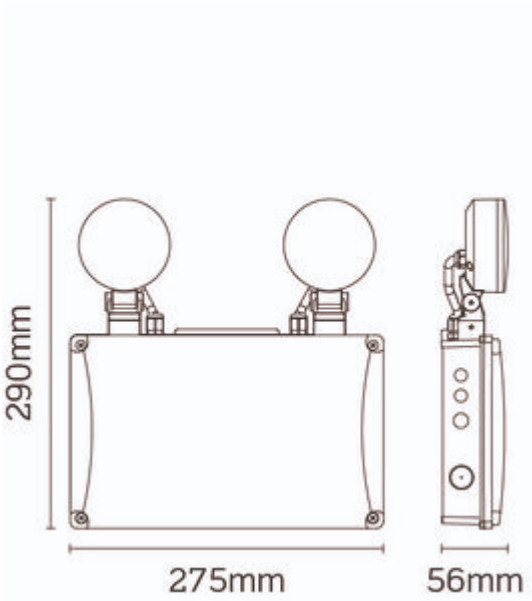

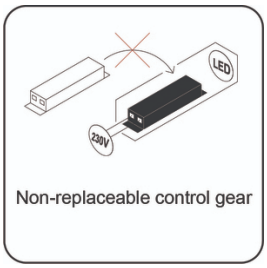

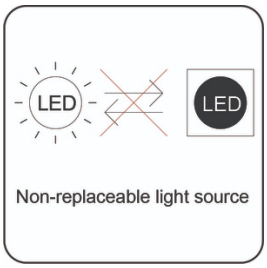

*Hours life stated is an indication of expected L70 chip and light output calculations when operating in optimum conditions. Product warranty period supports the full product during the term given. The L70 hours expectancy is not correlated with the full product warranty term, nor is it a representation of lumen depreciation during the warranty period.

**JCC Lighting Limited makes every effort to ensure that the Customs Tariff information in this document is timely and accurate. However, it's not possible for us to assure the absolute veracity and completeness of that information, as errors may occur. The placement of any inaccurate tariff information is completely unintentional. JCC Lighting Limited reserves the right, in its sole discretion, to correct any errors or omissions to the tariff code and to make any and all changes contained in this document at any time and without notice. It is the sole responsibility of the importer to ensure that the commodity code advised is correct for the products/goods being supplied by JCC Lighting Limited. JCC Lighting Limited does not assume any liabilities, losses, costs, and expenses arising out of or related to the importers use of this commodity code or the information related to the import of any JCC Lighting products.

JCC Lighting LTD, Lux Park, Chichester Business Park, City Fields Way, Tangmere, Chichester, West Sussex, PO20 2FT.
Sales: 01243 838999 (8am to 5pm Monday to Friday) Fax: 01243 838998 | sales@jcc.co.uk | www.jcc.co.uk
Company Registration Number: 03044848 | VAT Number: 918544112