LUXAIR™
EXTRACTION WITH ATTRACTION
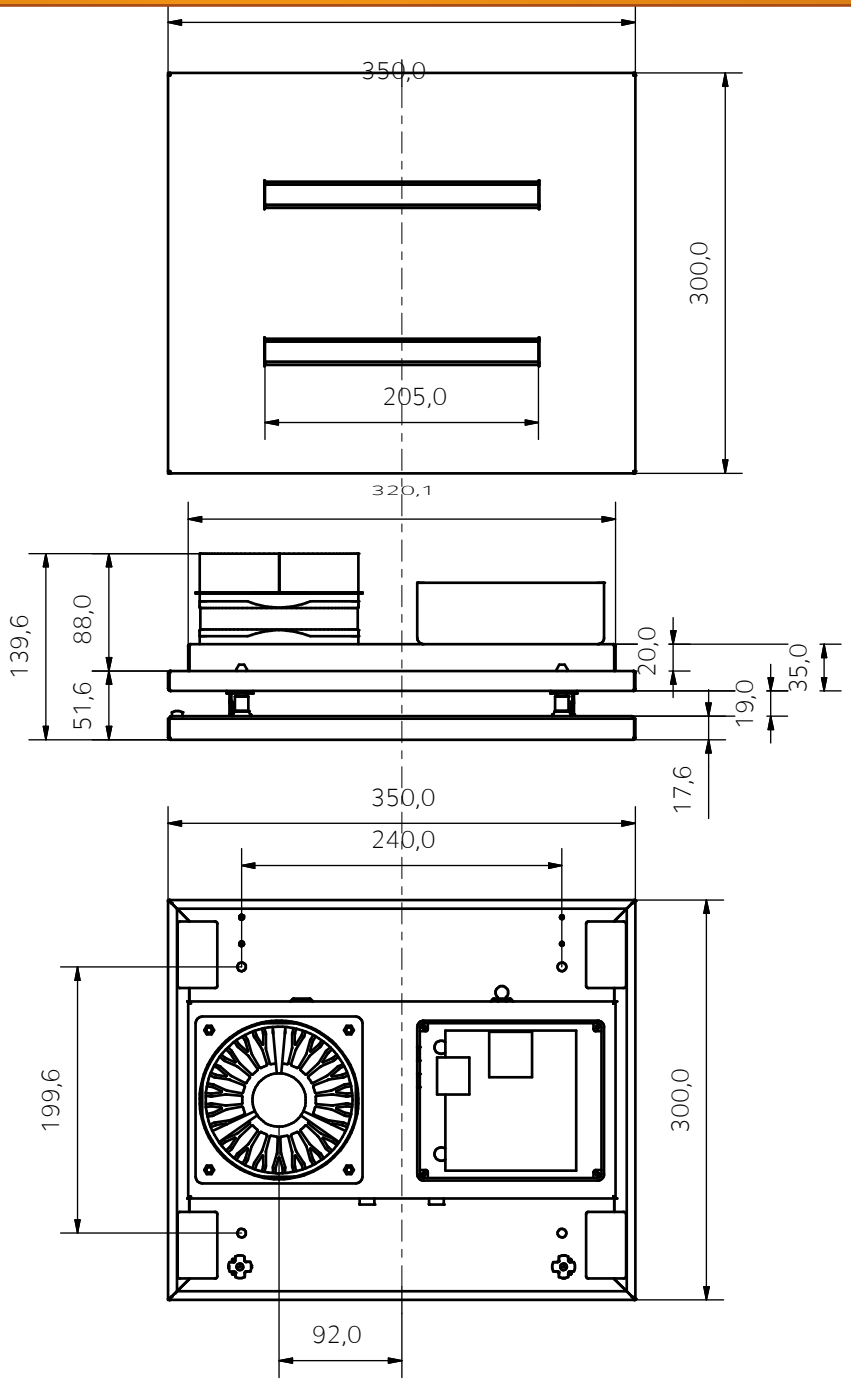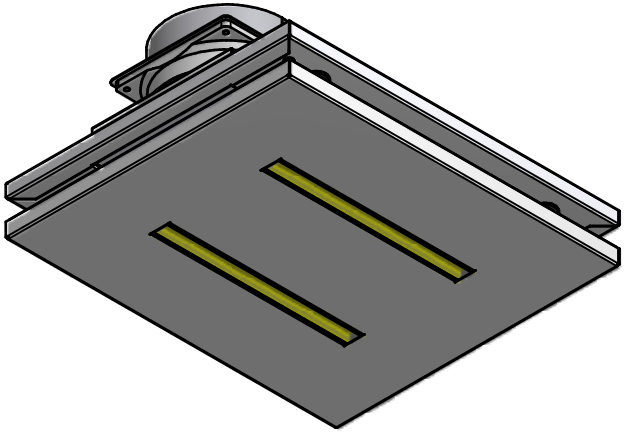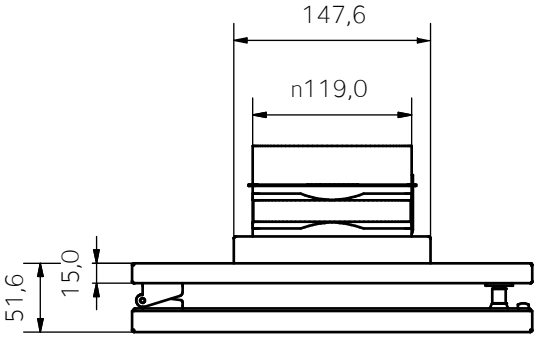
LA-350-CE-Small Ceiling Hood