EATON | MEM

# ADS8
## IP54 Direct-On-Line Starter

Technical Focus

- Replaces ADS7
- Rated up to 9kW



# New ADS8 Motor Starter

## The new ADS8 range of motor starters replaces the successful ADS7 range which was introduced 20 years ago.

## ADS8 builds upon the strengths of its predecessor and offers even easier installation, excellent performance and full compliance with the latest international standards.



Among the enhanced features, the new range is available for direct-on-line applications up to 9kW and is fully rated for AC3 duty.

- Separate overload relays offer flexibility and optimise stockists' shelf space
- Robust IP54 steel enclosure offers excellent earth continuity
- Fixing centres and gland entry positions identical to ADS7
- Part numbers based on ADS7 numbers for easy transition
- Easy six-stage assembly cuts installation time
- Captive cover screws and quick-release contactor mounting
- All internal screws have dual flat-slot/cross-slot heads
- 220-240V or 380-415V versions available
- Fully compliant with IEC 60947-4-1 and BS EN 60947-4-1
- Materials meet RoHS criteria

## New Catalogue Number Selection

With the introduction of the new range, we have adapted the existing ADS7 catalogue numbering system and where feasible replaced the 7 with an 8, or alternatively inserted the number 8 before the catalogue number. This new range supersedes the old ADS7 metal clad enclosure and will be available from July 2005.

Available in 220-240V and 380-415V versions.

## Starters

### DOL Surface Mounting Starter without Thermal Overload Relay

(Fitted with Start and Stop/Reset Push buttons).

| ADS7 | **ADS8** | | | |
|---|---|---|---|---|
| Old Catalogue No. | **New Catalogue No. 220-240V** | Full Load Current (415V MAX, 3ph, AC-3) | | |
| | | kW | HP | Amps |
| 27ADS1X | **28ADS1X** | 9 | 12.5 | 18 |

| Old Catalogue No. | **New Catalogue No. 380-415V** | Full Load Current (415V MAX, 3ph, AC-3) | | |
|---|---|---|---|---|
| | | kW | HP | Amps |
| 47ADS1X | **48ADS1X** | 9 | 12.5 | 18 |

* See alternative coil voltages from the coil selection table.

## Overload Relays

Overload relays, supplied separately, provide three-phase protection and phase-failure sensing in accordance with BS EN 60947-4-1. All are ambient temperature compensated between -5°C and 40°C. A changeover trip contact is provided allowing for manual reset.

### Thermal Overload Relay Selection with ADS7 to ADS8 Comparison



| ADS7 | | **ADS8** | | | |
|---|---|---|---|---|---|
| Old Catalogue No. | Full Load Current (A) | **New Catalogue No.** | Full Load Current (415V MAX, 3ph, AC-3) | | |
| | | | Amps | kW | HP |
| TT87 | 0.74 - 1.11 | **8TT87** | 0.63 - 1.0 | 0.37 | 0.50 |
| TT88 | 1.11 - 1.66 | **8TT88** | 1.0 - 1.6 | 0.55 | 0.75 |
| TT89 | 1.66 - 2.5 | **8TT89** | 1.6 - 2.5 | 1.10 | 1.50 |
| TT90 | 2.5 - 3.7 | **8TT90** | 2.5 - 4.0 | 1.50 | 2.00 |
| TT91 | 3.7 - 5.6 | **8TT91** | 4.0 - 6.0 | 2.20 | 3.00 |
| TT92 | 5.6 - 8.4 | **8TT92** | 7.0 - 10.0 | 4.00 | 5.50 |
| TT93 | 8.4 - 11.9 | **8TT93** | 10 - 13 | 5.50 | 7.50 |
| TT94 | 11.4 - 16.0 | **8TT94** | 13 - 18 | 9.00 | 12.5 |

## Spares and Accessories

Replacement coils and spare contactors are available, including a 110V coil option.

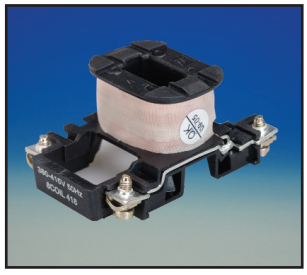

### Replacement Contactor Coils

| Coil Voltage 50Hz | To Suit Contactor | To Suit Starter | **New Catalogue No.** |
|---|---|---|---|
| 110V | 2818VCO or 4818 VCO | 28ADS1X or 48ADS1X | **8COIL118** |
| 220 - 240V | 2818VCO | 28ADS1X | **8COIL218** |
| 380 - 415V | 4818VCO | 48ADS1X | **8COIL418** |

## Contactors

The new contactor design complies with latest requirements of BS EN 60947-4-1:2001 (*Specification for low-voltage switchgear and controlgear. Contactors and motor-starters. Electromechanical contactors and motor-starters)* and the international standard IEC 60947-4-1:2002. Contactors are rated for AC3 duty and tested for 15 million mechanical and 1.5 million electrical operations.



### Replacement Contactor

| Coil Voltage 50Hz | kW | HP | Amps (AC3) | **New Catalogue No.** |
|---|---|---|---|---|
| 220 - 240V | 9 | 12.5 | 18 | **2818VCO** |
| 380 - 415V | 9 | 12.5 | 18 | **4818VCO** |

## Easy Six Stage Installation Process

### ADS8 Quick and Easy Installation

ADS8 has been designed with the installer in mind. Quick and Easy to install, the improved aesthetics are just one of the attractions of the ADS8 Motor Starter.

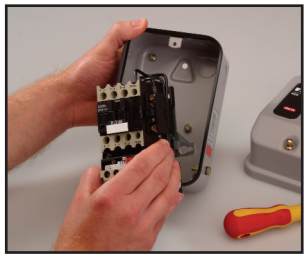

### Step 1 – Removal of Contactor Assembly

On removal of the enclosure lid, the Contactor / Relay assembly can be withdrawn by loosening the 2 fixing screws located top left and bottom right of the mounting plate.



### Step 2 – Gland Entry Selection

Selecting any of the removable gland entry positions, remove the appropriate knockouts suitable for cable entry.



### Step 3 – Cable Preparation

Once the empty enclosure is fastened to the wall, feed through cable tails as appropriate ensuring the unit is earthed.

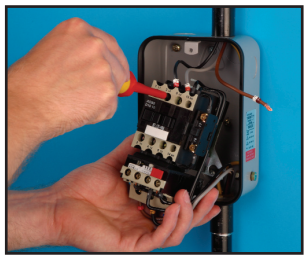

### Step 4 – Internal Wiring

Connect the pre-prepared cable tails to the Contactor and Relay as per the wiring diagram illustration and secure connections.

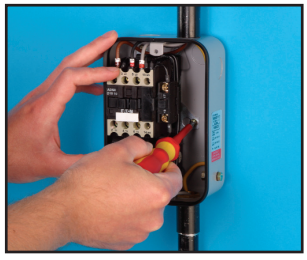

### Step 5 – Fastening of Pre-wired assembly

On completion of wiring, the Contactor / Relay assembly can be re-fitted into the enclosure and the 2 fixing screws tightened.

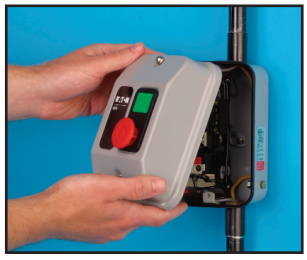

### Step 6 – Fitting of Main Cover

Ensure all cables are neatly routed, refit enclosure lid and tighten outer screws.

## Overall dimensions

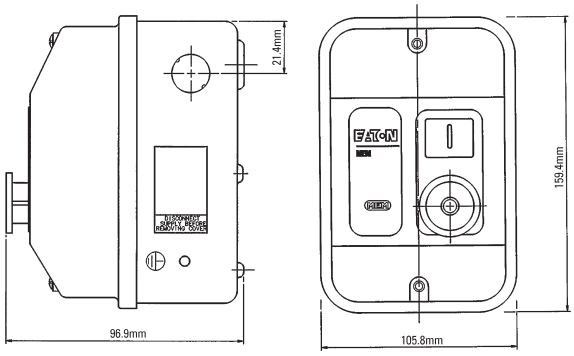


## Fixing and knockout positions

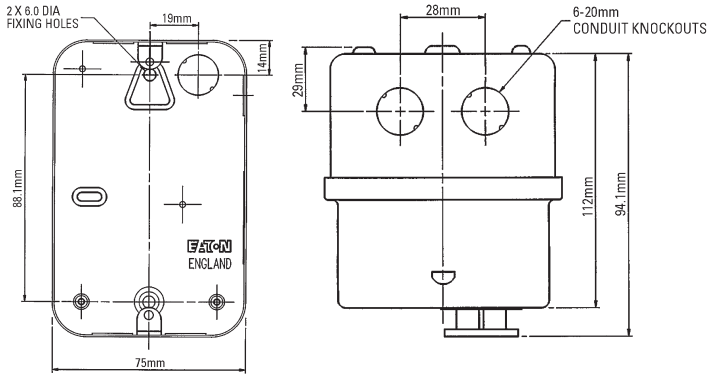


Impact-resistant, rust-protected sheet steel enclosure with two-tone grey powder coated finish. IP54 environmental protection against dust and splashing. Clear green start button and mushroom-headed STOP button. Substantial terminal block and excellent earth continuity. Knockouts in top, bottom, sides and back, in positions identical to ADS7 range. The offset position of the contactor leaves generous space for wiring.

## Circuit Diagrams

### A. Three Phase Motors-D.O.L. Starter. Local 3-Wire (Push Button) Control.

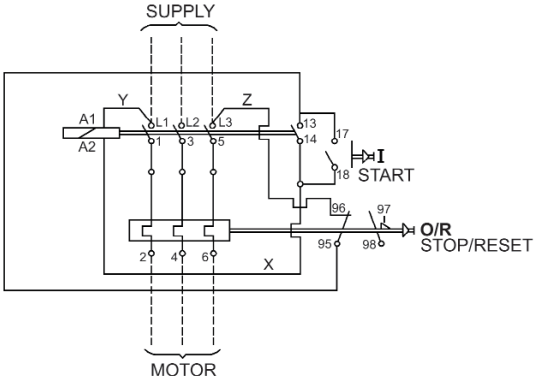


### B. Single Phase Motors-D.O.L. Starter. Local 3-Wire (Push Button) Control.

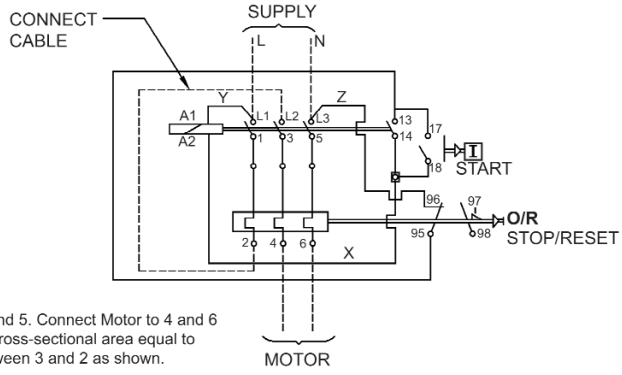


Connect supply to 1 and 5. Connect Motor to 4 and 6 and insert a cable of cross-sectional area equal to the supply cables between 3 and 2 as shown.

### Local & remote 3-Wire (Push Button) Control

Connect as above except remove lead X and add connections shown.

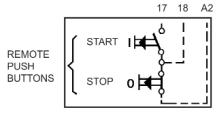


Note: You cannot and should not, mix and match ADS7 components with the ADS8.

Eaton Electric Limited
Reddings Lane
Birmingham B11 3EZ
www.eatonelectrical.co.uk

Customer Support Centre
Tel: 08700 545 333
Fax: 08700 540 333
ukcommorders@eaton.com

© 2005 Eaton Corporation

Partial or complete reproduction is granted with written permission of Eaton Electrical.

Printed in UK.
**Publication No. TD03406001U**
August 2005