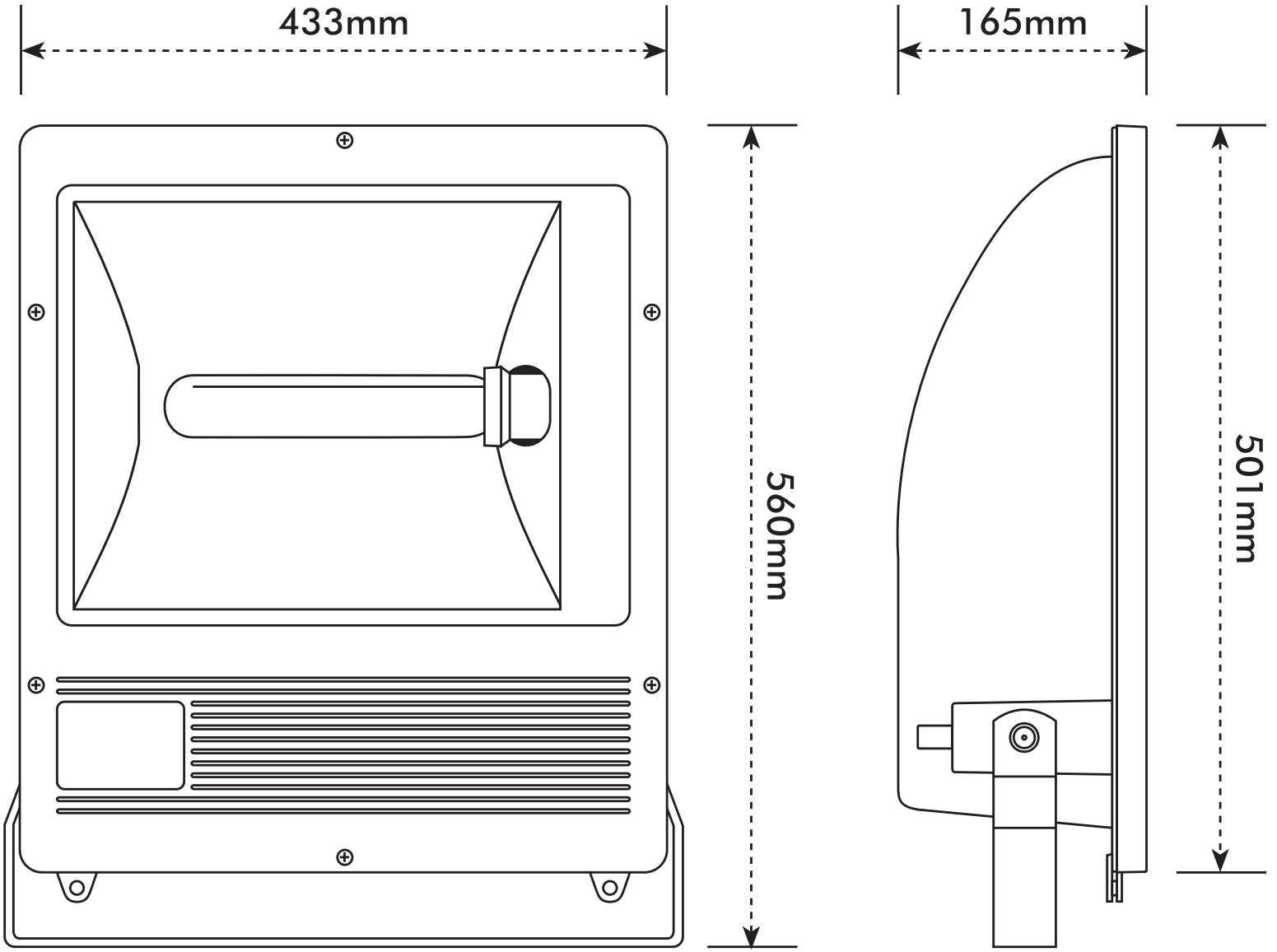
433mm
165mm
560mm
501mm